UBIQUITI
NETWORKS

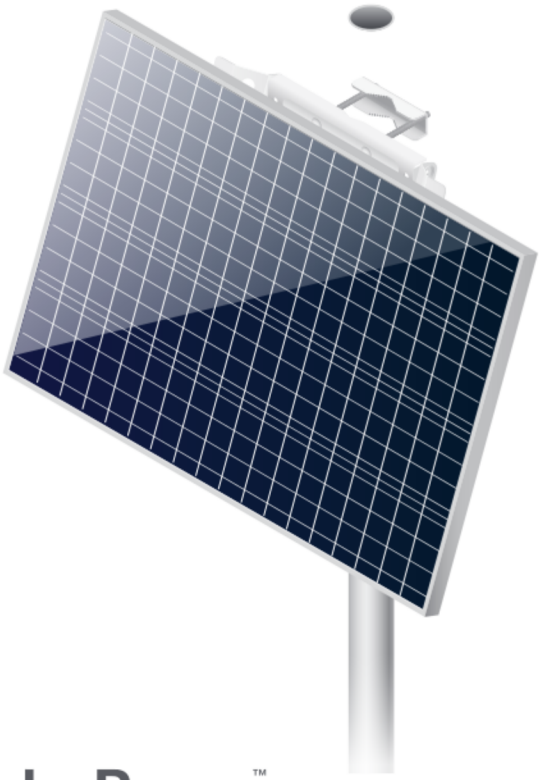

SolarBeam™

Off-Grid 635Wh Battery
and 100W PV Panel

Model: SB-700-1

Quick Start Guide

Introduction

Thank you for purchasing the Ubiquiti Networks® SolarBeam™. This Quick Start Guide is designed to guide you through installation and also includes warranty terms.

Package Contents

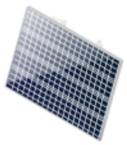
Panel

Mounting Bracket

Strut

Bracket Screws (Qty. 6)

M8 Flat Washers (Qty. 6)

Pole Clamps (Qty. 3)

Carriage Bolts (Qty. 6)

Hex Nuts (Qty. 6)

M10 Flat Washers (Qty. 6)

Split Lock Washers (Qty. 6)

DC Cable

NTC Thermistor

Single-Cable Grommet

Quick Start Guide

TERMS OF USE: Ubiquiti radio devices must be professionally installed. Shielded Ethernet cable and earth grounding must be used as conditions of product warranty. TOUGHCable™ is designed for outdoor installations. It is the professional installer's responsibility to follow local country regulations, including operation within legal frequency channels, output power, and Dynamic Frequency Selection (DFS) requirements.

Hardware Overview

Electronics Compartment

The compartment is located on the back of the main solar panel.

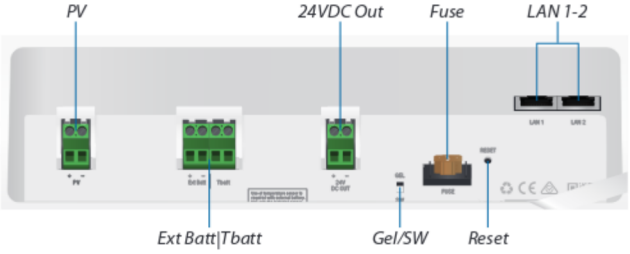

Components	Description
PV	Connects to PV cabling. Wake-up voltage on the PV input is 22 - 60V.
Ext Batt|Tbatt	Optional: Connect an external battery and the included *NTC Thermistor*. The programmable charge voltage is 25.1 - 30.6V (power-on default: 27.9V) or 27.2V (gel).
24VDC Out	Optional: You can connect a 24VDC device (40W maximum) to this controllable output. 24VDC output is enabled by default; you can disable output through the Configuration Interface. Please follow the instructions on page 17 to safely connect to the DC output.
Gel/SW	You have two options: • **Gel** Select if you use a gel-type battery. • **SW** Use the Configuration Interface to switch between battery types: AGM/flooded or gel.
Fuse	Overcurrent protection for 24VDC. The fuse is a 5A, ATM type.

Components	Description
Reset Button	There are two functions: • **Restart** Press and hold for three seconds while the SolarBeam is powered on. • **Reset to Factory Defaults** Press and hold for more than eight seconds while the SolarBeam is powered on.
LAN 1-2	Dual RJ45 ports support 10/100 Ethernet and passive 24V PoE output (40W maximum). Enable PoE output through the Configuration Interface.

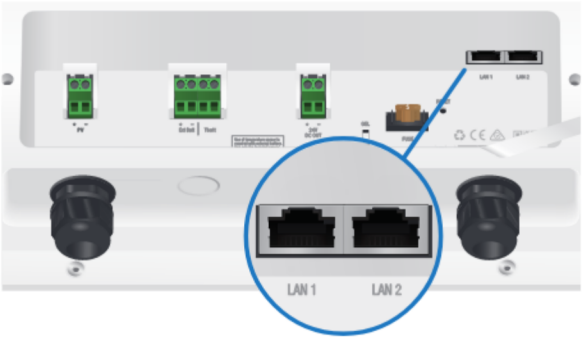

Note: You can connect your load(s) to either the *24VDC Out* or *LAN* ports, or all ports, as long as the total power consumption is less than or equal to 40W.

Note on 24VDC output: If your load device, such as the EdgePoint® EP-R6, has a 24VDC terminal, we recommend that you use the 24VDC output instead of PoE to reduce cable loss.

Note on battery lifetime: Regularly discharging your battery beyond 20% capacity will shorten its lifespan. We recommend that you add batteries to help avoid deep discharges and preserve battery life.

PV Cabling

The solar panel has two *Attached PV Cables*, positive (+) and negative (-).

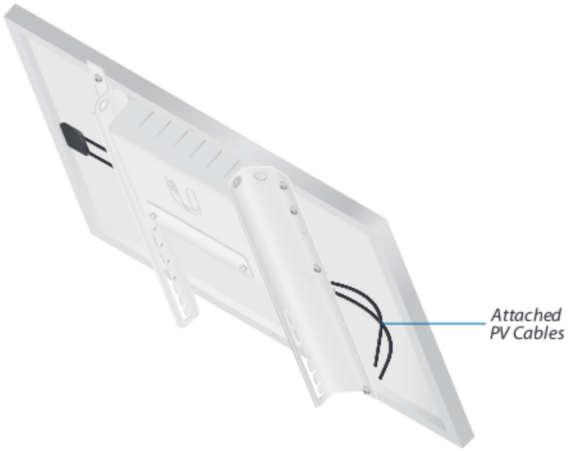

Installation Requirements

- Ratchet wrench with 13 and 17 mm sockets
- 13 mm combination wrench
- Shielded Category 5 (or above) cabling with drain wire should be used for all wired Ethernet connections and should be properly grounded to the earth/chassis ground.

  We recommend that you protect your networks from harmful outdoor environments and destructive ESD events with industrial-grade, shielded Ethernet cable from Ubiquiti Networks. For more details, visit **www.ubnt.com/toughcable**

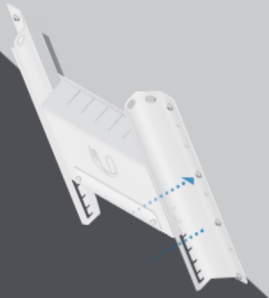

Installation Overview

Installation includes the following:

- **Hardware Installation** Mount the solar panel.
- **Connecting the SolarBeam** Connect the cables.
- **Accessing the Configuration Interface** Configure settings.

Hardware Installation

You have two options, pole or wall mounting. Proceed to the instructions for your option.

Pole Mounting

1. Attach two *Pole Clamps* to the top and bottom of the *Mounting Bracket*. For each clamp:
   a. Hold the *Mounting Bracket* with its clamps facing you and the *Angle Indicators* towards the bottom.
   b. Insert the two *Carriage Bolts* through the holes of the *Mounting Bracket*.
   c. Slide the hole of the *Pole Clamp* over one bolt of the *Mounting Bracket*.
   d. Place one *M10 Flat Washer*, *Split Lock Washer*, and *Hex Nut* on each bolt.

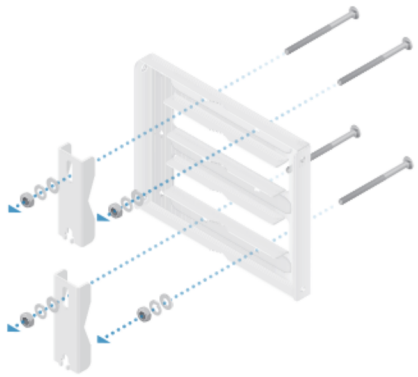

Note: In high-wind environments, you can add support with a *Pole Clamp* (also included) in the middle.

If you added the third *Pole Clamp* for additional support in high-wind environments, then the finished mounting assembly with three *Pole Clamps* will look like this:

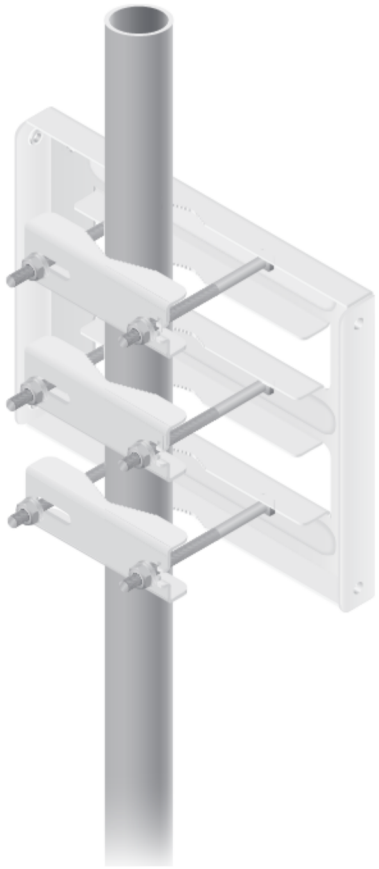

3. Attach the *Strut* to the *Mounting Bracket* using two *M8 Flat Washers* and *Bracket Screws*. Hand-tighten only.

4. Insert the *Panel* into the *Mounting Bracket* and *Strut*.

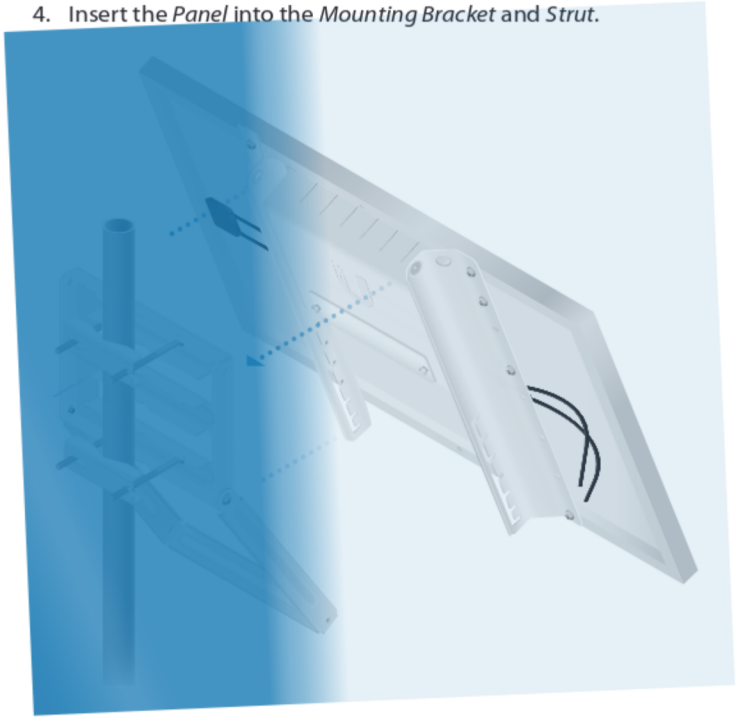

5. Attach the *Panel* to the *Mounting Bracket* and *Strut* using four *M8 Flat Washers* and *Bracket Screws*. Hand-tighten only.

6. Adjust the angle of the *Panel* based on your latitude (refer to the *Installation Guidelines* section on page 5). Then tighten the six *Bracket Screws* to 17 N · m.

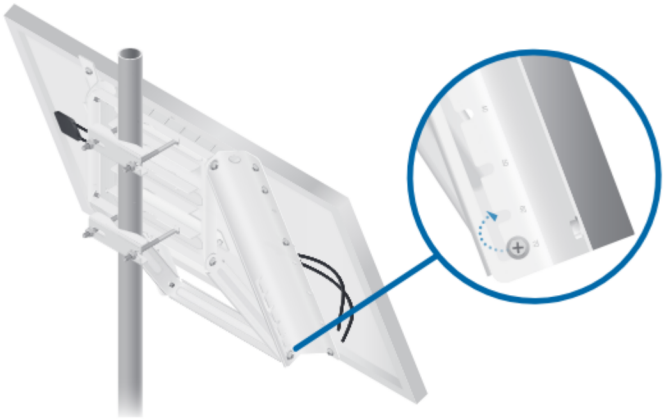

Wall Mounting

1. Position and securely fasten the flat side of the *Mounting Bracket* to the wall using six M8 or 5/16" screws (not included).

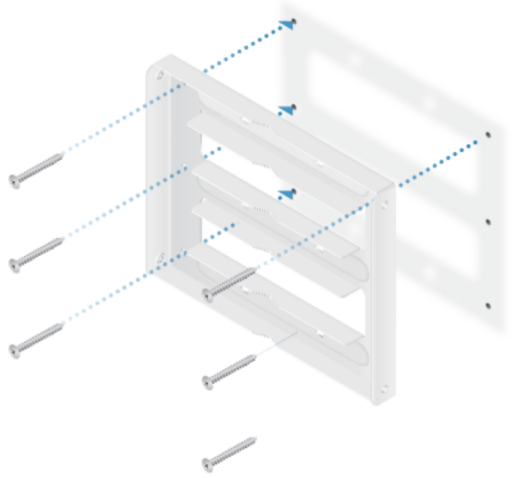

2. Attach the *Strut* to the *Mounting Bracket* using two *M8 Flat Washers* and *Bracket Screws*. Hand-tighten only.

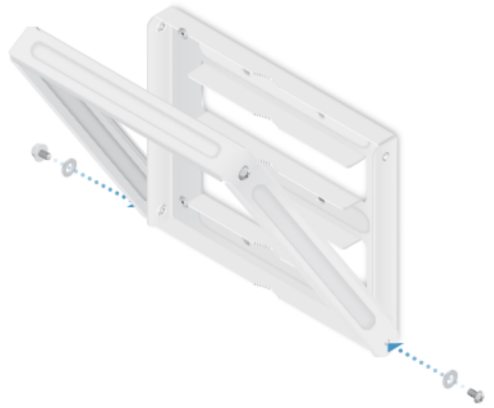

of the Panel based on your latitude (refer to
mobile-mounts on page 8. Then tighten the
to 17 N·m.

Connecting the SolarBeam

As a preventive safety measure, we strongly recommend that you make all connections in the following sequence:

1. *Connecting Ethernet* on page 15
2. *Connecting to the DC Output (Optional)* on page 17
3. *Connecting to an External Battery (Optional)* on page 18
4. *Connecting PV Cabling* on page 20

Before you begin, unscrew the thumbscrews to remove the port cover.

When you have finished your connections, hand-tighten the grommets and replace the port cover.

3. Wire the other end of the cable to a network device that supports the supplied voltage.
4. Replace the *Fuse* to enable the DC output.

Connecting to an External Battery (Optional)

You can use flexible conduit or an optional cable gland (not included) for your connection to an external battery.

1. Punch out the ½" NPT (M20) cutout on the bottom of the electronics compartment to allow the cable feed.

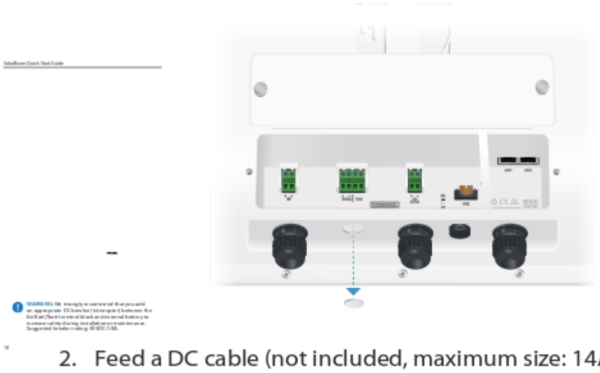

2. Feed a DC cable (not included, maximum size: 14AWG) through the hole and wire to the *Ext Batt* terminal block.

1. Which two positive 32-bit IPv4 addresses can be in input of the IPv4 NAT Pool?

EXAMINER: The IPv4 NAT pool is an arbitrary array from the perspective of the router. It is not in order, so single octets or whole bytes may be used to form the pool, yet canonical forms of the pool are valid.

2. Which two options (1-255) can be in the range of an IP Input.
3. Consider the IP Accounting MIB. Can the counters be less than zero?
4.

Accessing the Configuration Interface

Access the SolarBeam Configuration Interface to configure settings and monitor power information, including PV input, battery status, and 24VDC output statistics.

1. Ensure that your host system is connected via Ethernet to your local network.
2. Configure the Ethernet adapter on your host system with a static IP address on the 192.168.1.x subnet.
3. Launch your web browser and type **https://192.168.1.40** in the address field. Press **enter** (PC) or **return** (Mac).

4. The login screen will appear. Enter **ubnt** in the *Username* and *Password* fields. Read the Ubiquiti License Agreement, and select *I agree to the terms of this License Agreement* to accept it. Click **Login**.

5. The SolarBeam *Dashboard* screen will appear. Click **Power**.

6. 24VDC output is enabled by default. To disable it, click to toggle *OFF* for the *DC* setting.

WARNING: Before enabling 24VDC output, ensure that the connected device supports the supplied voltage.

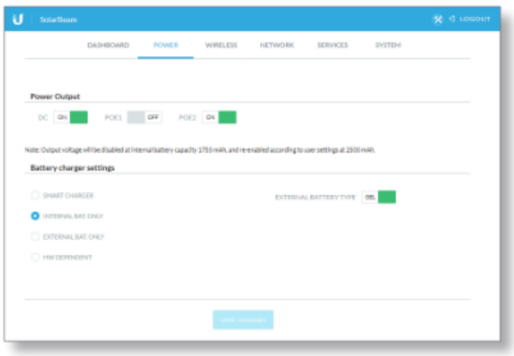

7. To output 24V passive PoE on the *LAN* port(s), click to toggle *ON* for the *POE1* and *POE 2* settings.

Note: If your network device supports direct DC input, then we recommend using the *24VDC Out* port instead of PoE output on the *LAN* port(s).

8. Click **Save Changes**.

Specifications

SB-700-1	
Dimensions (per Panel)	1005 x 670 x 200 mm (39.57 x 26.38 x 7.87")
Weight (Without Mount) Mount Only	19.1 kg (42.11 lb) 5.1 kg (11.24 lb)
Enclosure	UV Resistant Polycarbonate
Solar Module Output Power (STC)	100W
Networking Interfaces	Wi-Fi / (2) 10/100 Ethernet Ports
Wi-Fi Standards	802.11b/g/n
Antenna	Internal 2.4 GHz
Maximum TX Power	17 dBm
Processor	Atheros SoC
Memory	64 MB SDRAM
Storage	8 MB Flash
Button	Reset
Max. Power Consumption	1.5W
Power Source	PV Panel or Battery
PV Input Max. Voltage/Current	60V/10A
PV Input Wake-Up Voltage	22 - 60V
External Battery Charger Output	25.1 - 30.6V (Power-on Default: 27.9V) or 27.2V (Gel)
DC Output Voltage/Current	24V/1.7A
Wind Survivability	200 km/h (125 mph)
Snow Load Rating	5400 Pa
Vibration Test	IEC 68-2-6
Operating Temperature	-10 to 50° C (14 to 122° F)
Operating Humidity	5 to 95% Noncondensing
Mounting	Pole-Mount (Kit Included)
ESD/EMP Protection	± 24kV Contact/Air
Certifications	CE, FCC, IC, UL

Safety Notices

1. Read, follow, and keep these instructions.
2. Heed all warnings.
3. Only use attachments/accessories specified by the manufacturer.

WARNING: Do not use this product in a location that can be submerged by water.

WARNING: Avoid using this product during an electrical storm. There may be a remote risk of electric shock from lightning.

Electrical Safety Information

1. Compliance is required with respect to voltage, frequency, and current requirements indicated on the manufacturer's label. Connection to a different power source than those specified may result in improper operation, damage to the equipment or pose a fire hazard if the limitations are not followed.
2. There are no operator serviceable parts inside this equipment. Service should be provided only by a qualified service technician.

Limited Warranty

UBIQUITI NETWORKS, Inc ("UBIQUITI NETWORKS") warrants that the product(s) furnished hereunder (the "Product(s)") shall be free from defects in material and workmanship for a period of one (1) year from the date of shipment by UBIQUITI NETWORKS under normal use and operation. UBIQUITI NETWORKS' sole and exclusive obligation and liability under the foregoing warranty shall be for UBIQUITI NETWORKS, at its discretion, to repair or replace any Product that fails to conform to the above warranty during the above warranty period. The expense of removal and reinstallation of any Product is not included in this warranty. The warranty period of any repaired or replaced Product shall not extend beyond its original term.

Warranty Conditions

The above warranty does not apply if the Product:

(I) has been modified and/or altered, or an addition made thereto, except by Ubiquiti Networks, or Ubiquiti Networks' authorized representatives, or as approved by Ubiquiti Networks in writing;

(II) has been painted, rebranded or physically modified in any way;

(III) has been damaged due to errors or defects in cabling;

(IV) has been subjected to misuse, abuse, negligence, abnormal physical, electromagnetic or electrical stress, including lightning strikes, or accident;

(V) has been damaged or impaired as a result of using third party firmware;

(VI) has no original Ubiquiti MAC label, or is missing any other original Ubiquiti label(s); or

(VII) has not been received by Ubiquiti within 30 days of issuance of the RMA.

In addition, the above warranty shall apply only if: the product has been properly installed and used at all times in accordance, and in all material respects, with the applicable Product documentation; all Ethernet cabling runs use CAT5 (or above), and for outdoor installations, shielded Ethernet cabling is used, and for indoor installations, in cabling requirements are followed.

Returns

No Products will be accepted for replacement or repair without obtaining a Return Materials Authorization (RMA) number from UBIQUITI NETWORKS during the warranty period, and the Products being received at UBIQUITI NETWORKS' facility freight prepaid in accordance with the RMA process of UBIQUITI NETWORKS. Products returned without an RMA number will not be processed and will be returned freight collect or subject to disposal. Information on the RMA process and obtaining an RMA number can be found at: **www.ubnt.com/support/warranty**

Disclaimer

EXCEPT FOR ANY EXPRESS WARRANTIES PROVIDED HEREIN, UBIQUITI NETWORKS, ITS AFFILIATES, AND ITS AND THEIR THIRD PARTY DATA, SERVICE, SOFTWARE AND HARDWARE PROVIDERS HEREBY DISCLAIM AND MAKE NO OTHER REPRESENTATION OR WARRANTY OF ANY KIND, EXPRESS, IMPLIED OR STATUTORY, INCLUDING, BUT NOT LIMITED TO, REPRESENTATIONS, GUARANTEES, OR WARRANTIES OF MERCHANTABILITY, ACCURACY, QUALITY OF SERVICE OR RESULTS, AVAILABILITY, SATISFACTORY QUALITY, LACK OF VIRUSES, QUIET ENJOYMENT, FITNESS FOR A PARTICULAR PURPOSE AND NON-INFRINGEMENT AND ANY WARRANTIES ARISING FROM ANY COURSE OF DEALING, USAGE OR TRADE PRACTICE IN CONNECTION WITH SUCH PRODUCTS AND SERVICES. BUYER ACKNOWLEDGES THAT NEITHER UBIQUITI NETWORKS NOR ITS THIRD PARTY PROVIDERS CONTROL BUYER'S EQUIPMENT OR THE TRANSFER OF DATA OVER COMMUNICATIONS FACILITIES, INCLUDING THE INTERNET, AND THAT THE PRODUCTS AND SERVICES MAY BE SUBJECT TO LIMITATIONS, INTERRUPTIONS, DELAYS, CANCELLATIONS AND OTHER PROBLEMS INHERENT IN THE USE OF COMMUNICATIONS FACILITIES. UBIQUITI NETWORKS, ITS AFFILIATES AND ITS AND THEIR THIRD PARTY PROVIDERS ARE NOT RESPONSIBLE FOR ANY INTERRUPTIONS, DELAYS, CANCELLATIONS, DELIVERY FAILURES, DATA LOSS, CONTENT CORRUPTION, PACKET LOSS, OR OTHER DAMAGE RESULTING FROM ANY OF THE FOREGOING. In addition, UBIQUITI NETWORKS does not warrant that the operation of the Products will be error-free or that operation will be uninterrupted. In no event shall UBIQUITI NETWORKS be responsible for damages or claims of any nature or description relating to system performance, including coverage, buyer's selection of products (including the Products) for buyer's application and/or failure of products (including the Products) to meet government or regulatory requirements.

Limitation of Liability

EXCEPT TO THE EXTENT PROHIBITED BY LOCAL LAW, IN NO EVENT WILL UBIQUITI OR ITS SUBSIDIARIES, AFFILIATES OR SUPPLIERS BE LIABLE FOR DIRECT, SPECIAL, INCIDENTAL, CONSEQUENTIAL OR OTHER DAMAGES (INCLUDING LOST PROFIT, LOST DATA, OR DOWNTIME COSTS), ARISING OUT OF THE USE, INABILITY TO USE, OR THE RESULTS OF USE OF THE PRODUCT, WHETHER BASED IN WARRANTY, CONTRACT, TORT OR OTHER LEGAL THEORY, AND WHETHER OR NOT ADVISED OF THE POSSIBILITY OF SUCH DAMAGES.

Note

Some countries, states and provinces do not allow exclusions of implied warranties or conditions, so the above exclusion may not apply to you. You may have other rights that vary from country to country, state to state, or province to province. Some countries, states and provinces do not allow the exclusion or limitation of liability for incidental or consequential damages, so the above limitation may not apply to you. EXCEPT TO THE EXTENT ALLOWED BY LOCAL LAW, THESE WARRANTY TERMS DO NOT EXCLUDE, RESTRICT OR MODIFY, AND ARE IN ADDITION TO, THE MANDATORY STATUTORY RIGHTS APPLICABLE TO THE LICENSE OF ANY SOFTWARE (EMBEDDED IN THE PRODUCT) TO YOU. The United Nations Convention on Contracts for the International Sale of Goods shall not apply to any transactions regarding the sale of the Products.

Compliance

FCC

Changes or modifications not expressly approved by the party responsible for compliance could void the user's authority to operate the equipment.

This device complies with Part 15 of the FCC Rules. Operation is subject to the following two conditions.

1. This device may not cause harmful interference, and
2. This device must accept any interference received, including interference that may cause undesired operation.

This equipment has been tested and found to comply with the limits for a Class A digital device, pursuant to Part 15 of the FCC Rules. These limits are designed to provide reasonable protection against harmful interference when the equipment is operated in a commercial environment. This equipment generates, uses, and can radiate radio frequency energy and, if not installed and used in accordance with the instruction manual, may cause harmful interference to radio communications. Operations of this equipment in a residential area is likely to cause harmful interference in which case the user will be required to correct the interference at his own expense.

This radio transmitter (FCC ID: SWX-SB700) has been approved by FCC to operate with the antenna types listed below with the maximum permissible gain and required antenna impedance for each antenna type indicated. Antenna types not included in this list, having a gain greater than the maximum gain indicated for that type, are strictly prohibited for use with this device.

ISED Canada

CAN ICES-3(A)/NMB-3(A)

This device complies with ISED Canada licence-exempt RSS standard(s). Operation is subject to the following two conditions:

1. This device may not cause interference, and
2. This device must accept any interference, including interference that may cause undesired operation of the device.

This radio transmitter (IC: 6545A-SB700) has been approved by ISED Canada.

CAN ICES-3(A)/NMB-3(A)

Le présent appareil est conforme aux CNR d'ISDE Canada applicables aux appareils radio exempts de licence. L'exploitation est autorisée aux deux conditions suivantes :

1. l'appareil ne doit pas produire de brouillage;
2. l'appareil doit accepter tout brouillage radioélectrique subi, même si le brouillage est susceptible d'en compromettre le fonctionnement.

Le présent émetteur radio (IC: 6545A-SB700) a été approuvé par ISDE Canada) a été approuvé par ISDE Canada.

RF Exposure Warning

The antennas used for this transmitter must be installed to provide a separation distance of at least 20 cm from all persons and must not be located or operating in conjunction with any other antenna or transmitter.

Les antennes utilisées pour ce transmetteur doivent être installé en considérant une distance de séparation de toute personnes d'au moins 20 cm et ne doivent pas être localisé ou utilisé en conflit avec tout autre antenne ou transmetteur.

Australia and New Zealand

Warning: This is a Class A product. In a domestic environment this product may cause radio interference in which case the user may be required to take adequate measures.

CE Marking

CE marking on this product represents the product is in compliance with all directives that are applicable to it.

RoHS/WEEE Compliance Statement

English

European Directive 2012/19/EU requires that the equipment bearing this symbol on the product and/or its packaging must not be disposed of with unsorted municipal waste. The symbol indicates that this product should be disposed of separately from regular household waste streams. It is your responsibility to dispose of this and other electric and electronic equipment via designated collection facilities appointed by the government or local authorities. Correct disposal and recycling will help prevent potential negative consequences to the environment and human health. For more detailed information about the disposal of your old equipment, please contact your local authorities, waste disposal service, or the shop where you purchased the product.

Deutsch

Die Europäische Richtlinie 2012/19/EU verlangt, dass technische Ausrüstung, die direkt am Gerät und/oder an der Verpackung mit diesem Symbol versehen ist, nicht zusammen mit unsortiertem Gemeindeabfall entsorgt werden darf. Das Symbol weist darauf hin, dass das Produkt von regulärem Haushaltmüll getrennt entsorgt werden sollte. Es liegt in Ihrer Verantwortung, dieses Gerät und andere elektrische und elektronische Geräte über die dafür zuständigen und von der Regierung oder örtlichen Behörden dazu bestimmten Sammelstellen zu entsorgen. Ordnungsgemäßes Entsorgen und Recyceln trägt dazu bei, potentielle negative Folgen für Umwelt und die menschliche Gesundheit zu vermeiden. Wenn Sie weitere Informationen zur Entsorgung Ihrer Altgeräte benötigen, wenden Sie sich bitte an die örtlichen Behörden oder städtischen Entsorgungsdienste oder an den Händler, bei dem Sie das Produkt erworben haben.

Español

La Directiva 2012/19/UE exige que los equipos que lleven este símbolo en el propio aparato y/o en su embalaje no deben eliminarse junto con otros residuos urbanos no seleccionados. El símbolo indica que el producto en cuestión debe separarse de los residuos domésticos convencionales con vistas a su eliminación. Es responsabilidad suya desechar este y cualesquiera otros aparatos eléctricos y electrónicos a través de los puntos de recogida que ponen a su disposición el gobierno y las autoridades locales. Al desechar y reciclar correctamente estos aparatos estará contribuyendo a evitar posibles consecuencias negativas para el medio ambiente y la salud de las personas. Si desea obtener información más detallada sobre la eliminación segura de su aparato usado, consulte a las autoridades locales, al servicio de recogida y eliminación de residuos de su zona o pregunte en la tienda donde adquirió el producto.

Français

La directive européenne 2012/19/UE exige que l'équipement sur lequel est apposé ce symbole sur le produit et/ou son emballage ne soit pas jeté avec les autres ordures ménagères. Ce symbole indique que le produit doit être éliminé dans un circuit distinct de celui pour les déchets des ménages. Il est de votre responsabilité de jeter ce matériel ainsi que tout autre matériel électrique ou électronique par les moyens de collecte indiqués par le gouvernement et les pouvoirs publics des collectivités territoriales. L'élimination et le recyclage en bonne et due forme ont pour but de lutter contre l'impact néfaste potentiel de ce type de produits sur l'environnement et la santé publique. Pour plus d'informations sur le mode d'élimination de votre ancien équipement, veuillez prendre contact avec les pouvoirs publics locaux, le service de traitement des déchets, ou l'endroit où vous avez acheté le produit.

Italiano

La direttiva europea 2012/19/UE richiede che le apparecchiature contrassegnate con questo simbolo sul prodotto e/o sull'imballaggio non siano smaltite insieme ai rifiuti urbani non differenziati. Il simbolo indica che questo prodotto non deve essere smaltito insieme ai normali rifiuti domestici. È responsabilità del proprietario smaltire sia questi prodotti sia le altre apparecchiature elettriche ed elettroniche mediante le specifiche strutture di raccolta indicate dal governo o dagli enti pubblici locali. Il corretto smaltimento ed il riciclaggio aiuteranno a prevenire conseguenze potenzialmente negative per l'ambiente e per la salute dell'essere umano. Per ricevere informazioni più dettagliate circa lo smaltimento delle vecchie apparecchiature in Vostro possesso, Vi invitiamo a contattare gli enti pubblici di competenza, il servizio di smaltimento rifiuti o il negozio nel quale avete acquistato il prodotto.

Declaration of Conformity

български [Bulgarian] С настоящото UBIQUITI NETWORKS декларира, че този тип радиосъоръжение SB-700 е в съответствие с Директива 2014/53/ЕС. Цялостният текст на ЕС декларацията за съответствие може да се намери на следния интернет адрес: www.ubnt.com/compliance

Hrvatski [Croatian] UBIQUITI NETWORKS ovime izjavljuje da je radijska oprema tipa SB-700 u skladu s Direktivom 2014/53/EU. Cjeloviti tekst EU izjave o sukladnosti dostupan je na sljedećoj internetskoj adresi: www.ubnt.com/compliance

Čeština [Czech] Tímto UBIQUITI NETWORKS prohlašuje, že typ rádiového zařízení SB-700 je v souladu se směrnicí 2014/53/EU. Úplné znění EU prohlášení o shodě je k dispozici na této internetové adrese: www.ubnt.com/compliance

Dansk [Danish] Hermed erklærer UBIQUITI NETWORKS, at radioudstyrstypen SB-700 er i overensstemmelse med direktiv 2014/53/EU. EU-overensstemmelseserklæringens fulde tekst kan findes på følgende internetadresse: www.ubnt.com/compliance

Nederlands [Dutch] Hierbij verklaar ik, UBIQUITI NETWORKS, dat het type radioapparatuur SB-700 conform is met Richtlijn 2014/53/EU. De volledige tekst van de EU-conformiteitsverklaring kan worden geraadpleegd op het volgende internetadres: www.ubnt.com/compliance

English Hereby, UBIQUITI NETWORKS declares that the radio equipment type SB-700 is in compliance with Directive 2014/53/EU. The full text of the EU declaration of conformity is available at the following internet address: www.ubnt.com/compliance

Eesti keel [Estonian] Käesolevaga deklareerib UBIQUITI NETWORKS, et käesolev raadioseadme tüüp SB-700 vastab direktiivi 2014/53/EL nõuetele. ELi vastavusdeklaratsiooni täielik tekst on kättesaadav järgmisel internetiaadressil: www.ubnt.com/compliance

Suomi [Finnish] UBIQUITI NETWORKS vakuuttaa, että radiolaitetyyppi SB-700 on direktiivin 2014/53/EU mukainen. EU-vaatimustenmukaisuusvakuutuksen täysimittainen teksti on saatavilla seuraavassa internetosoitteessa: www.ubnt.com/compliance

Français [French] Le soussigné, UBIQUITI NETWORKS, déclare que l'équipement radioélectrique du type SB-700 est conforme à la directive 2014/53/UE. Le texte complet de la déclaration UE de conformité est disponible à l'adresse internet suivante: www.ubnt.com/compliance

Deutsch [German] Hiermit erklärt UBIQUITI NETWORKS, dass der Funkanlagentyp SB-700 der Richtlinie 2014/53/EU entspricht. Der vollständige Text der EU-Konformitätserklärung ist unter der folgenden Internetadresse verfügbar: www.ubnt.com/compliance

Ελληνικά [Greek] Με την παρούσα ο/η UBIQUITI NETWORKS, δηλώνει ότι ο ραδιοεξοπλισμός SB-700 πληροί την οδηγία 2014/53/ΕΕ. Το πλήρες κείμενο της δήλωσης συμμόρφωσης ΕΕ διατίθεται στην ακόλουθη ιστοσελίδα στο διαδίκτυο: www.ubnt.com/compliance

Magyar [Hungarian] UBIQUITI NETWORKS igazolja, hogy a SB-700 típusú rádióberendezés megfelel a 2014/53/EU irányelvnek. Az EU-megfelelőségi nyilatkozat teljes szövege elérhető a következő internetes címen: www.ubnt.com/compliance

Íslenska [Icelandic] Hér með lýsir UBIQUITI NETWORKS yfir því að SB-700 er í samræmi við grunnkröfur og aðrar kröfur, sem gerðar eru í tilskipun 2014/53/EU. Fullur texti ESB samræmisyfirlýsing er að finna á eftirfarandi netfangi: www.ubnt.com/compliance

Italiano [Italian] Il fabbricante, UBIQUITI NETWORKS, dichiara che il tipo di apparecchiatura radio SB-700 è conforme alla direttiva 2014/53/UE. Il testo completo della dichiarazione di conformità UE è disponibile al seguente indirizzo Internet: www.ubnt.com/compliance

Latvių kalba [Latvian] Ar šo UBIQUITI NETWORKS deklarē, ka radioiekārta SB-700 atbilst Direktīvai 2014/53/ES. Pilns ES atbilstības deklarācijas teksts ir pieejams šādā interneta vietnē: www.ubnt.com/compliance

Lietuvių kalba [Lithuanian] Aš, UBIQUITI NETWORKS, patvirtinu, kad radijo įrenginių tipas SB-700 atitinka Direktyvą 2014/53/ES. Visas ES atitikties deklaracijos tekstas prieinamas šiuo interneto adresu: www.ubnt.com/compliance

Malti [Maltese] B'dan, UBIQUITI NETWORKS, niddikjara li dan it-tip ta' tagħmir tar-radju SB-700 huwa konformi mad-Direttiva 2014/53/UE. Id-dikjarazzjoni tal-konformità tista' tiġi kkonsultata minn www.ubnt.com/compliance

Norsk [Norwegian] UBIQUITI NETWORKS erklærer herved at utstyret SB-700 er i samsvar med de grunnleggende krav og øvrige relevante krav i direktiv 2014/53/EU. Den fulle teksten til EU-samsvarserklæringen er tilgjengelig på følgende internettadresse: www.ubnt.com/compliance

Polski [Polish] UBIQUITI NETWORKS niniejszym oświadcza, że typ urządzenia radiowego SB-700 jest zgodny z dyrektywą 2014/53/UE. Pełny tekst deklaracji zgodności UE jest dostępny pod następującym adresem internetowym: www.ubnt.com/compliance

Português [Portuguese] O(a) abaixo assinado(a) UBIQUITI NETWORKS declara que o presente tipo de equipamento de rádio SB-700 está em conformidade com a Diretiva 2014/53/UE. O texto integral da declaração de conformidade está disponível no seguinte endereço de Internet: www.ubnt.com/compliance

Română [Romanian] Prin prezenta, UBIQUITI NETWORKS declară că tipul de echipamente radio SB-700 este în conformitate cu Directiva 2014/53/UE. Textul integral al declarației UE de conformitate este disponibil la următoarea adresă internet: www.ubnt.com/compliance

Slovenčina [Slovak] UBIQUITI NETWORKS týmto vyhlasuje, že rádiové zariadenie typu SB-700 je v súlade so smernicou 2014/53/EÚ. Úplné EÚ vyhlásenie o zhode je k dispozícii na tejto internetovej adrese: www.ubnt.com/compliance

Slovenščina [Slovenian] UBIQUITI NETWORKS potrjuje, da je tip radijske opreme SB-700 skladen z Direktivo 2014/53/EU. Celotno besedilo izjave EU o skladnosti je na voljo na naslednjem spletnem naslovu: www.ubnt.com/compliance

Español [Spanish] Por la presente, UBIQUITI NETWORKS declara que el tipo de equipo radioeléctrico SB-700 es conforme con la Directiva 2014/53/UE. El texto completo de la declaración UE de conformidad está disponible en la dirección Internet siguiente: www.ubnt.com/compliance

Svenska [Swedish] Härmed försäkrar UBIQUITI NETWORKS att denna typ av radioutrustning SB-700 överensstämmer med direktiv 2014/53/EU. Den fullständiga texten till EU-försäkran om överensstämmelse finns på följande webbadress: www.ubnt.com/compliance

Online Resources

Support help.ubnt.com

Community community.ubnt.com

Downloads downloads.ubnt.com

JL081417

www.ubnt.com

Ubiquiti Networks, Inc.
685 Third Avenue, 27th Floor
New York, NY 10017
USA

©2017 Ubiquiti Networks, Inc. All rights reserved. Ubiquiti, Ubiquiti Networks, the Ubiquiti U logo, the Ubiquiti beam logo, EdgePoint, SolarBeam, and TOUGHCable are trademarks or registered trademarks of Ubiquiti Networks, Inc. in the United States and in other countries. All other trademarks are the property of their respective owners.

640-00293-04
640-00293-04